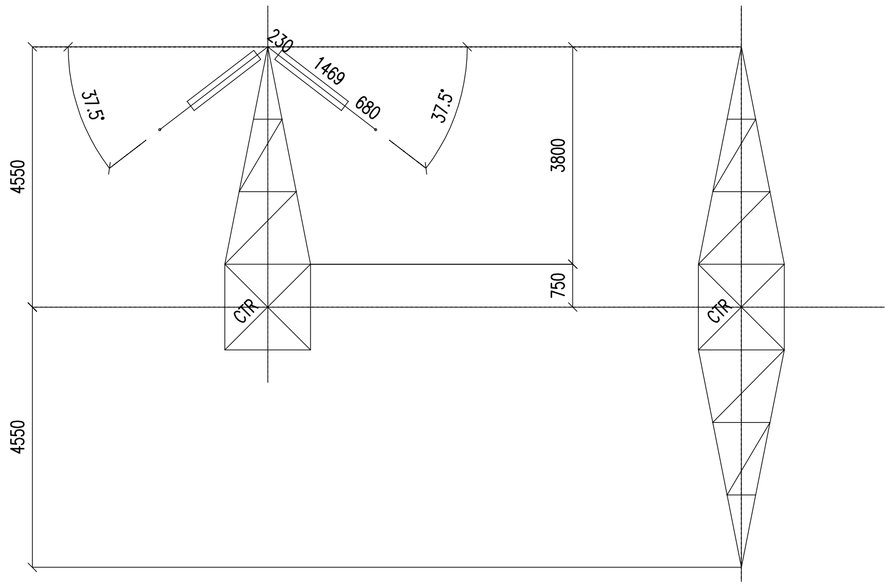

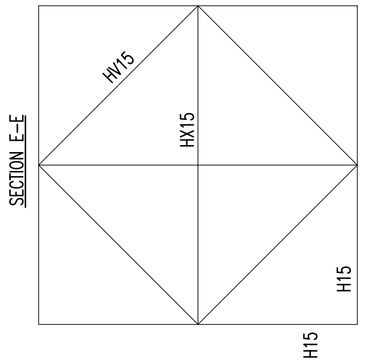

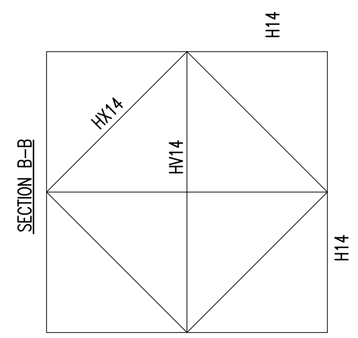

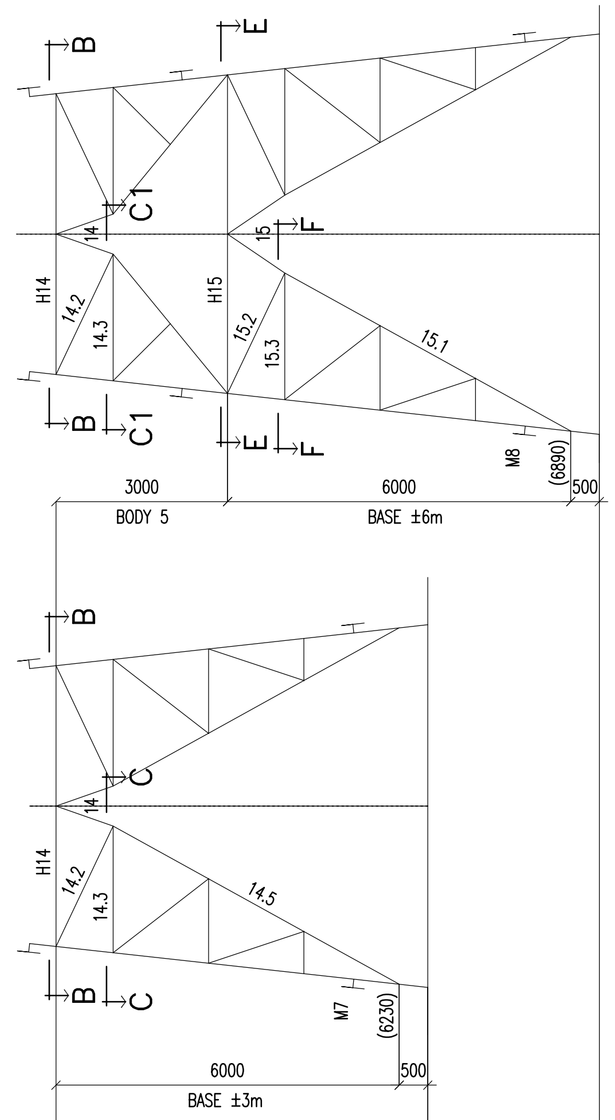

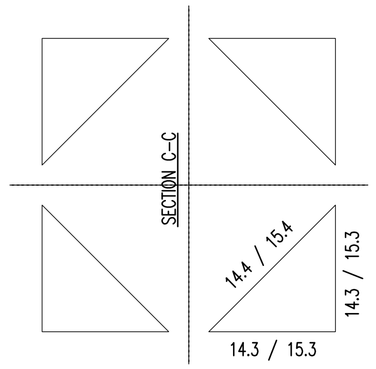

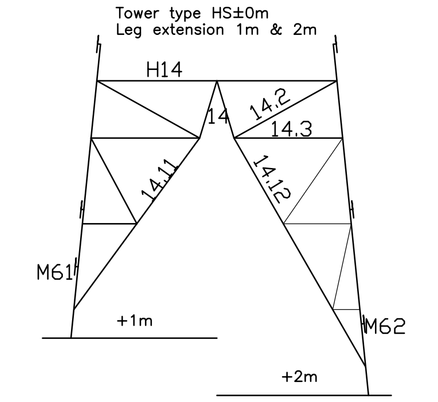

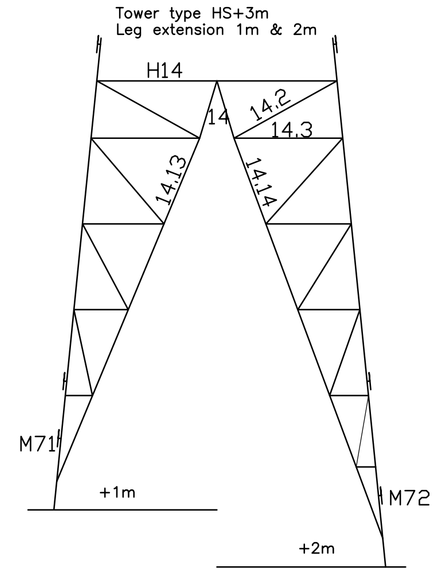

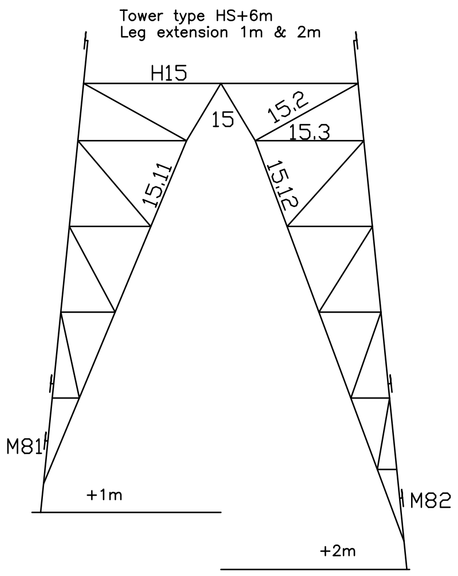

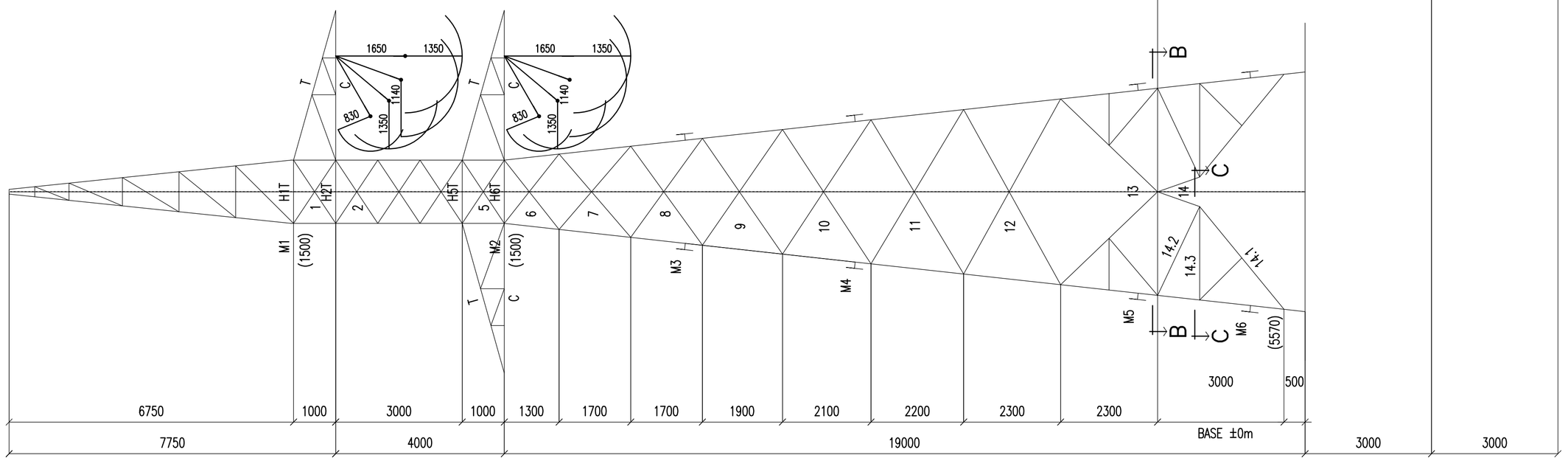

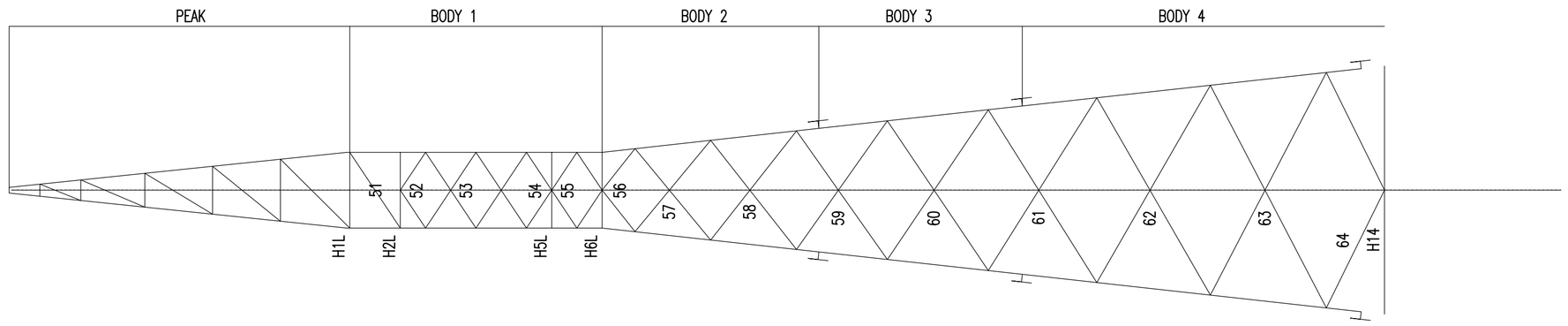

GENERAL NOTES:

TOWER CHARACTERISTICS

PHASE CONDUCTOR :	1xACSR "Lynx" 175mm²
EARTH WIRE :	1xOPGW–91–AL3/45–A20SA 135,9mm²
DEVIATION ANGLE :	60° to 75°
BASIC SPAN :	350m
WIND SPAN :	350m
WEIGHT SPAN :	1200m
UPLIFT WEIGHT SPAN :	–300m

ULTIMATE LOADINGS (daN)

	NORMAL WORKING CONDITION Sf = 2,50 (included)			BROKEN ONE ANY CABLE CONDUCTOR OR SHIELDWIRE Sf = 1,25 (included)		
	VERTICAL	TRANSVERSAL	LONGITUDINAL	VERTICAL	TRANSVERSAL	LONGITUDINAL
CONDUCTOR	2650	7545	–	795	1905	2375
SHIELDWIRE	1710	5960	–	490	1490	1900

WIND PRESSURE ON 1 1/2 TIMES THE PROJECTED AREA STEEL MEMBERS OF ONE LONGITUDINAL FACE OF THE TOWER

172,5 daN/m²	86,3 daN/m²

REV.	dd/mm/yy	REVISION DESCRIPTION	DRAWN	CHECKED	APPROVED
02	15/02/2013	UP TO DATE	TCES	TCES	
01	15/12/2012	UP TO DATE	TCES	TCES	

CG Holdings Belgium NV
Systems Division
Arbeidsstraat-weg 167, B-2800 Mechelen
Tel.: +32(015)280 310 - Fax: +32(015)283 491
www.cgglobal.com

ISO Symbol: SCALE: 1/60 LAYOUT: A1

THIS DRAWING SHALL NOT BE COPIED,REPRODUCED,TRANSMITTED OR GRANTED TO THIRD PARTIES WITHOUT OUR PRIOR AGREEMENT

CLIENT:
MINISTRY OF ENERGY - REPUBLIC OF KENYA

DRAWING TITLE :
OHL 132KV SINGLE CIRCUIT
-Tower type HS

DRAWING No.: 100008-L0-DG-ST04