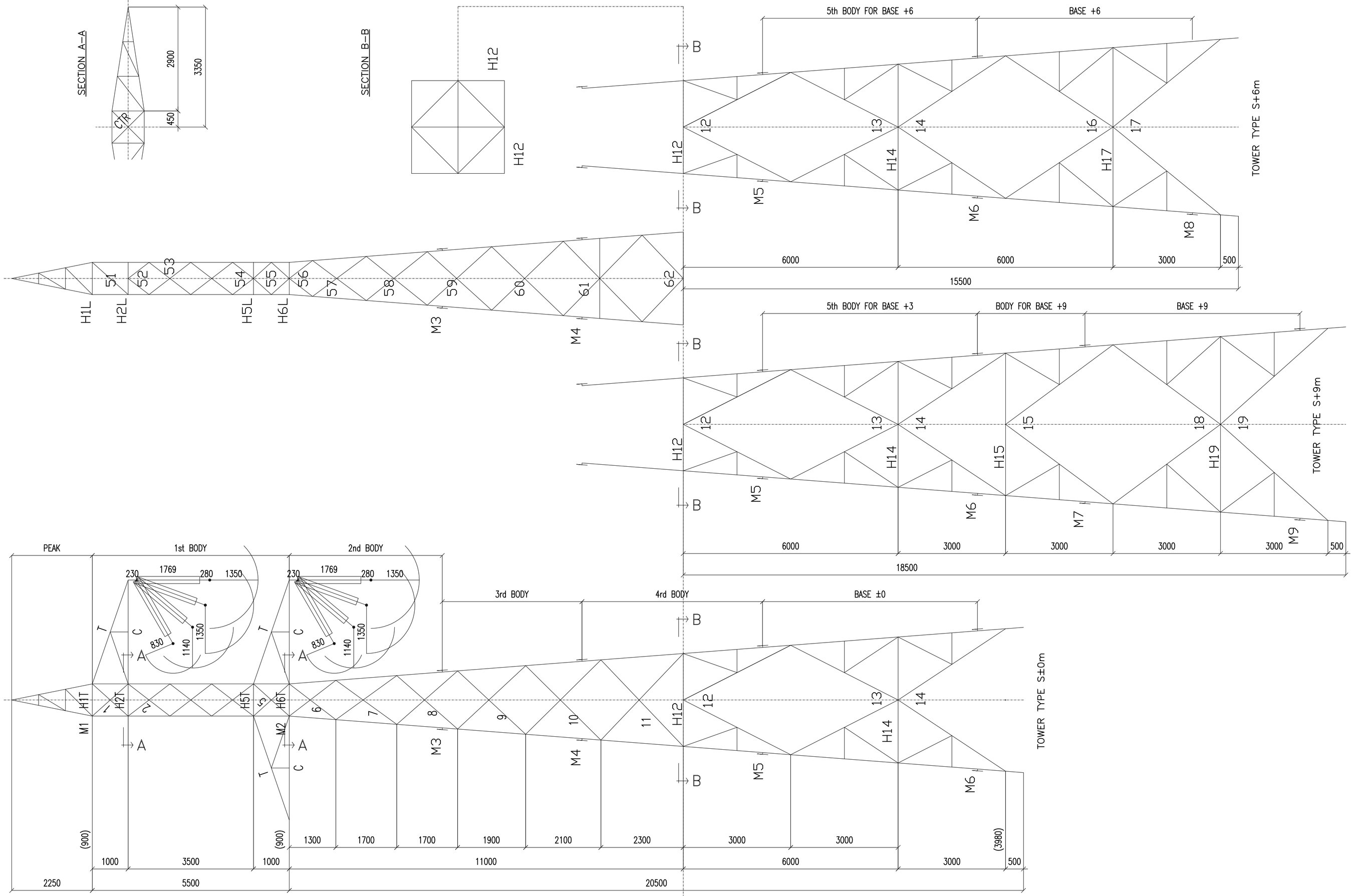

TOWER TYPE S+6m–Leg extension 1m & 2m

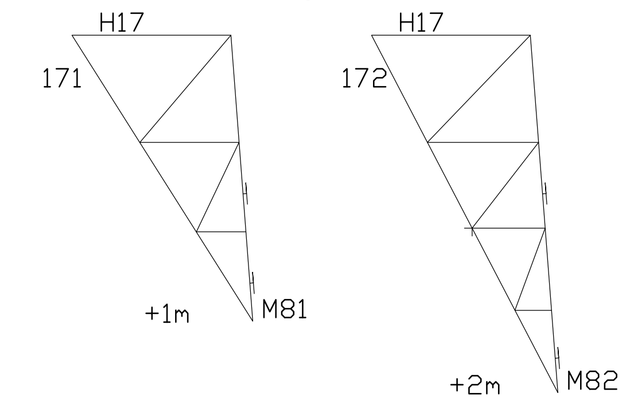

TOWER TYPE S+3m–Leg extension 1m & 2m

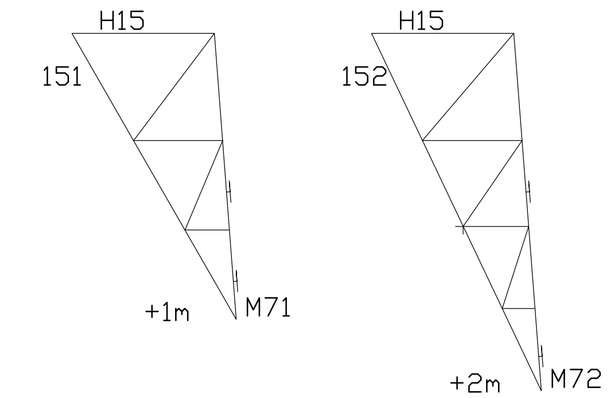

TOWER TYPE S±0m–Leg extension 1m & 2m

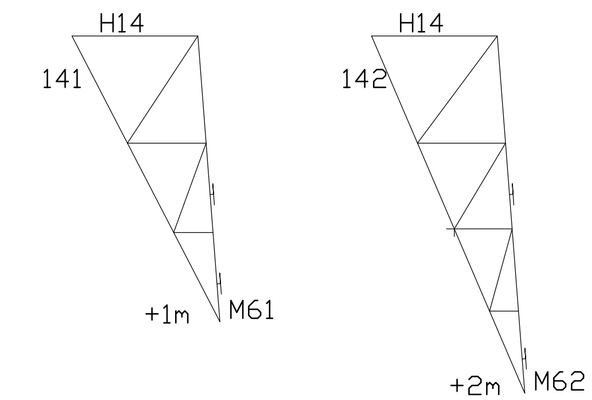

TOWER TYPE S+9m–Leg extension 1m & 2m

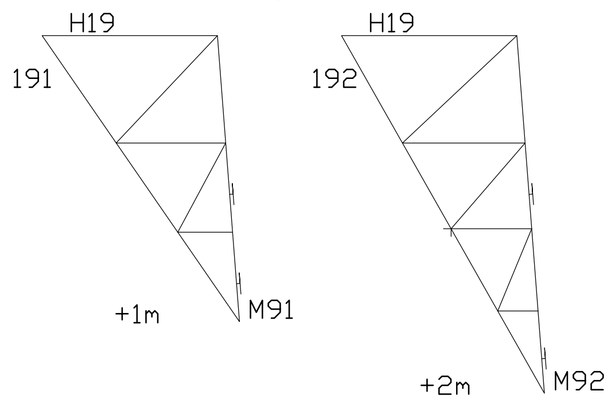

GENERAL NOTES:

TOWER CHARACTERISTICS	
PHASE CONDUCTOR :	1xACSR "Lynx" 175mm²
EARTH WIRE :	1xOPGW–91–AL3/45–A20SA 135,9mm²
DEVIATION ANGLE :	0° to 2°
BASIC SPAN :	350m
WIND SPAN :	350m
WEIGHT SPAN :	700m
UPLIFT WEIGHT SPAN :	0m

ULTIMATE LOADINGS (daN)						
	NORMAL WORKING CONDITION Sf = 2,50 (included)			BROKEN ONE ANY CABLE CONDUCTOR OR SHIELDWIRE Sf = 1,25 (included)		
	VERTICAL	TRANSVERSAL	LONGITUDINAL	VERTICAL	TRANSVERSAL	LONGITUDINAL
CONDUCTOR	1520	875	–	490	255	1800
SHIELDWIRE	1075	665	–	340	195	2040
WIND PRESSURE ON 1 1/2 TIMES THE PROJECTED AREA STEEL MEMBERS OF ONE LONGITUDINAL FACE OF THE TOWER						
	172,5 daN/m²			86,3 daN/m²		

REV.	dd/mm/yy	REVISION DESCRIPTION	DRAWN	CHECKED	APPROVED
01	31/01/2013	UP TO DATE	TCES	TCES	
01	15/12/2012	UP TO DATE	TCES	TCES	

CG Holdings Belgium NV
Systems Division
Antwerpsesteenweg 167, B-2800 Mechelen
Tel.: +32(0)15/283 333 Fax.: +32(0)15/283 491
www.cgglobal.com

CLIENT:
MINISTRY OF ENERGY - REPUBLIC OF KENYA

DRAWING TITLE :
OHL 132KV SINGLE CIRCUIT
-Tower type S

ISO Symbol: SCALE: 1/60 LAYOUT: A1

DRAWING No.: 100008-L0-DG-ST01

THIS DRAWING SHALL NOT BE COPIED,REPRODUCED,TRANSMITTED OR GRANTED TO THIRD PARTIES WITHOUT OUR PRIOR AGREEMENT